D	-60
D ( )	34
I_D	-9A

- A FE
- ,
- -
- F
- 150

I -

.

I_D @ $_C$ = 25 C	C D C , $_G$ @ 10	-9	A
I_D	D C	-36	
$_D$ @ $_C$ = 25 C	D	60	
$_D$	D -	-60	
$_G$	G - -	20	
$_J$ $_G$	J	-55 +150	C

JA	,J - -A		41.7	/

@ A=25

(B)D	D - -	-60				G = 0 , I_D = -250 A
D ( )	D - - -		34	43		G =-10 , I_D=-20A
			45	58		G =-4.5 , I_D=-20A
G ( )	G	-1		-2.5		D = G , I_D =-250 A
I_D	D - -			1	A	D =-48 , G =0
I_G	G - -			100	A	G = 20 , D =0
F	F	5				D =-5 ,I_D=-20A
			48		C	D =-30
	G - -		11			I_D=-20A
	G - -D (" ")		10			G =-10
( )	-		14			D =-30
			20			G =-10
( )	-		40			GE =3
	F		19			I_D=-1A
C	I		3060		F	D =-30
C			300			G =0
C			205			=1.0 H

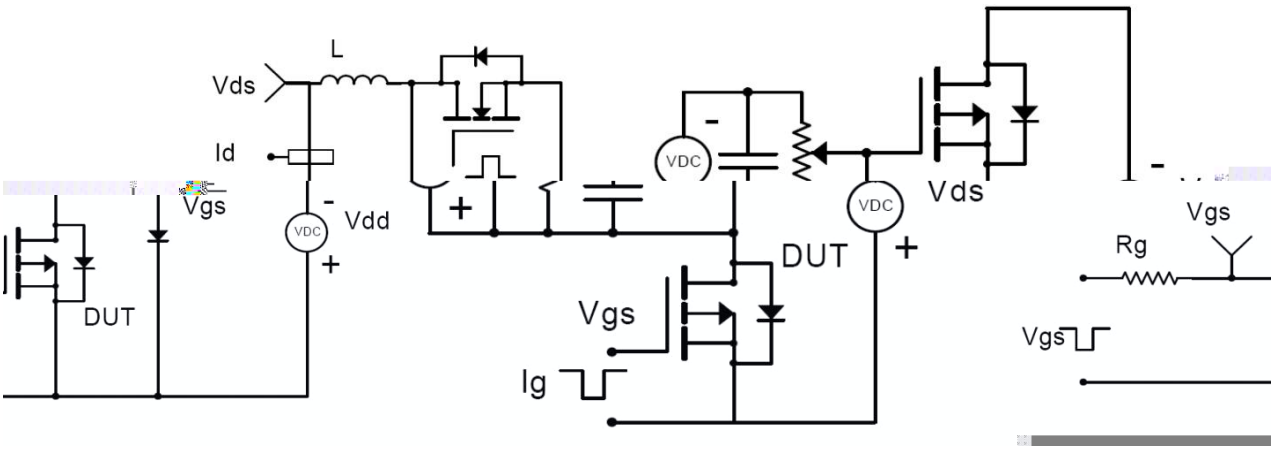

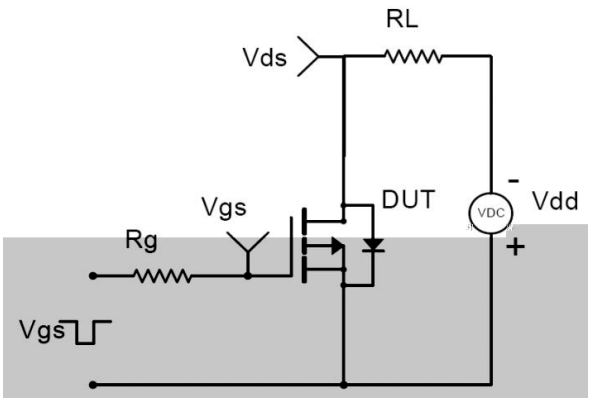

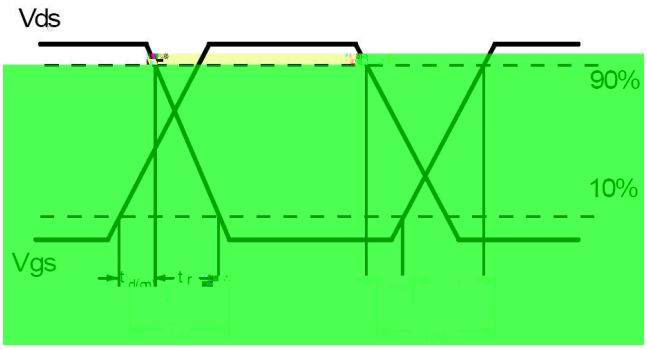

C .

; . .

D . , - -

.

JA 1 2 F -4 2 . C ,

A =25 C.

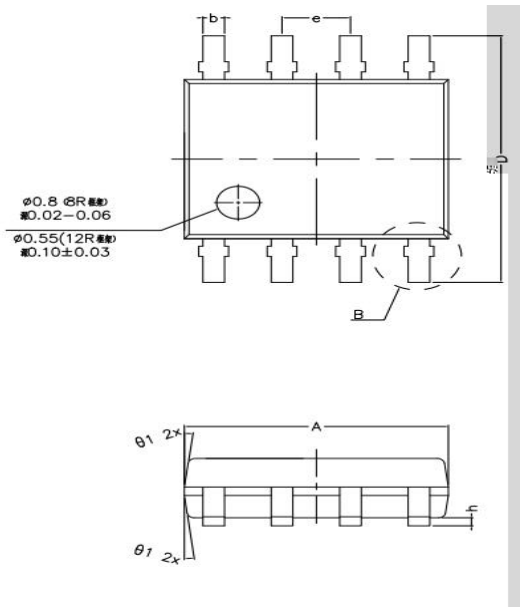

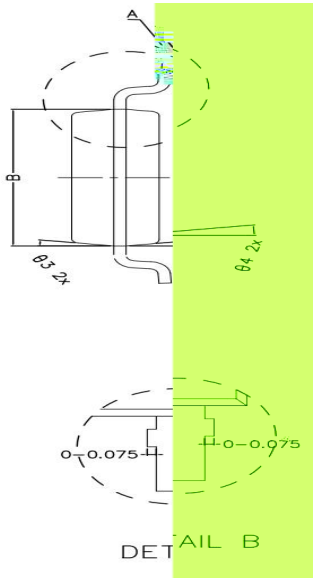

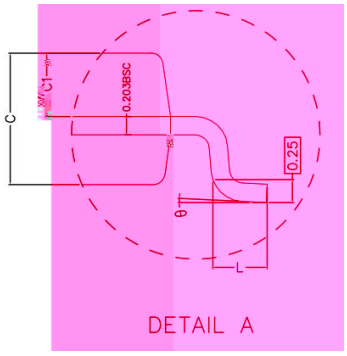

	COMMON DIMENSIONS (UNITS OF MEASURE IS mm)		
	MIN	NOMINAL	MAX
A	4.800	4.900	5.000
B	3.800	3.900	4.000
C	1.350	1.450	1.550
C1	0.650	0.700	0.750
D	5.840	6.040	6.240
L	0.400	0.600	0.800
b	0.350	0.400	0.450
h	0.020	0.100	0.250
e	1.270TYP		
θ_1	7° TYPE(8R)	10°	TYPE(12R)
θ_2	7° TYPE(8R)	10°	TYPE(12R)
θ_3	8° TYPE(8R)	12°	TYPE(12R)
θ_4	8° TYPE(8R)	10°	TYPE(12R)
θ		8°	
		0° ~	

A

, - , ' ,

/ .

C

.

,

, (, ,)

.

,

, ,

, ,

. ,

.

( ) C .,L . - - . H ,

. I

, ,

. ,

.

, , .

I (,)

,

.

, ,

, , ,

( ) C .,L .

I ( ) ;

. ,

.

A

/ , . , "D "

.