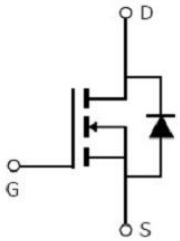
D
G
S

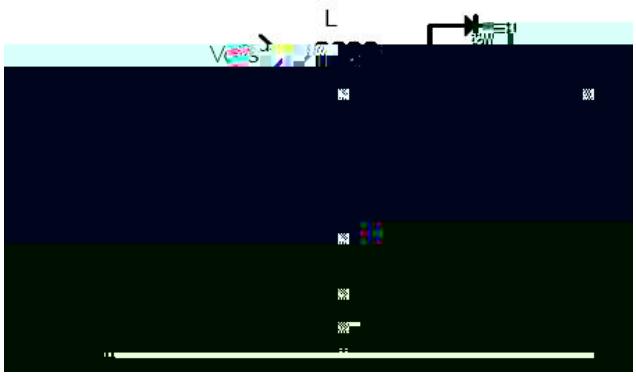
L

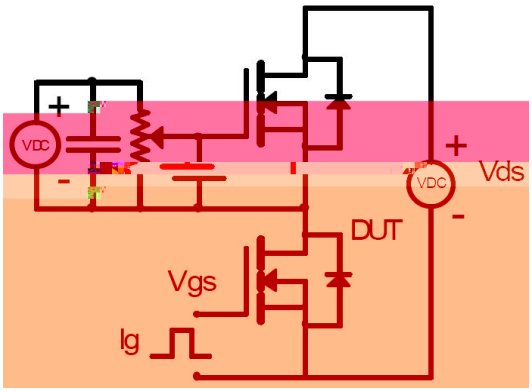
VDC
+
-
VDC
+
Vds
-
DUT
Vgs
Ig

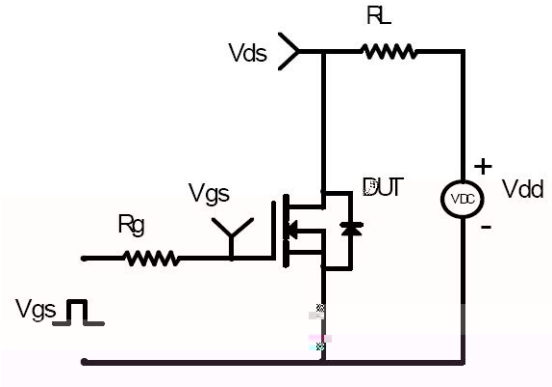
RL
Vds
Vgs
DUT
VDC
+
Vdd
-
Rg
Vgs

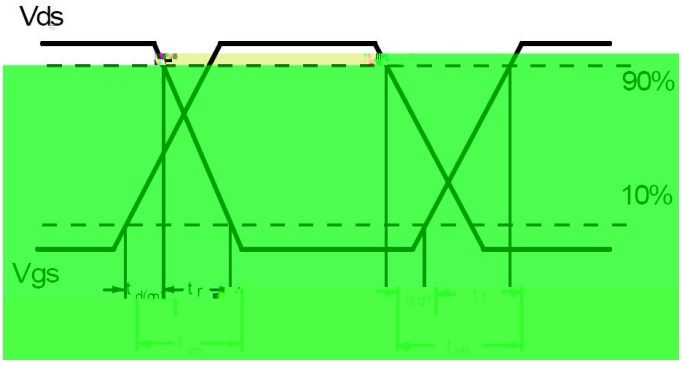
Vds
90%
10%
Vgs

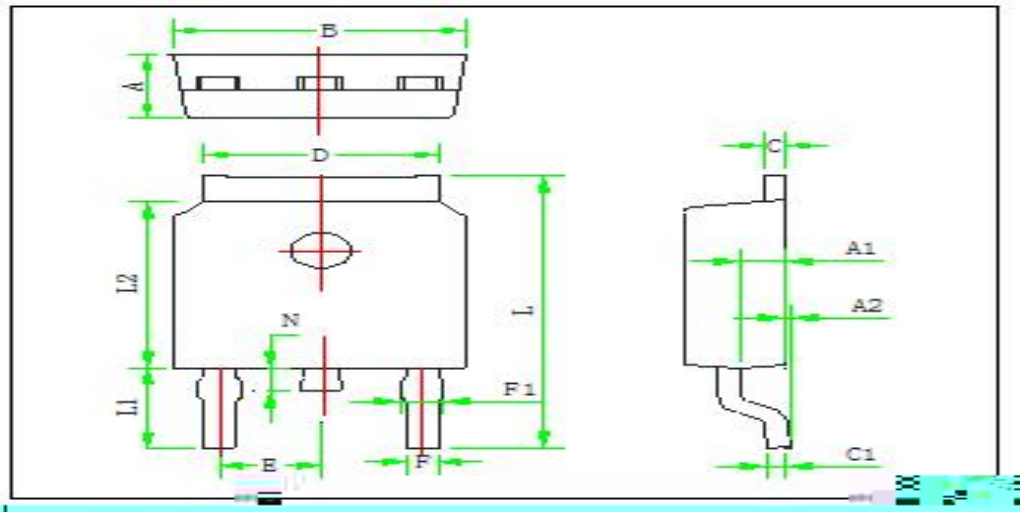

Symbol	Min	Typ	Max
A	2.20	2.30	2.40
A1	0.91	1.01	1.11
A2	0.05	0.15	0.25
B	6.45	6.60	6.75
C	0.45	[illegible]	[illegible]
C1	0.45	0.50	0.58
D	5.12	5.32	5.52
E		2.286 TYP	
F	0.66	0.76	0.86
F1	0.66	0.86	1.06
L	9.60	9.90	10.20
L1	2.6	2.8	3.0
L2	5.95	6.10	6.25
N	0.60	0.80	1.00