	40
( )	13 (.)
	32

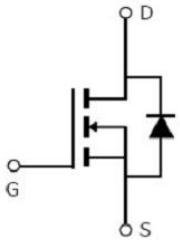

,

-

150

-

.

.

@ = 25	, @ 10	32	
@ = 100	, @ 10	21	
		128	
@ = 25		2.4	
	-	40	
	- -	20	
		-55 +150	

@ =25

( )	- -	40				= 0 , = 250
( )	- - -		13	17		=10 , = 25
			15	20		=4.5 , = 20
( )		1		2		= , = 250
	- -			1		= 40 , = 0
	- -			100		=20
				-100		= -20
			1180			= 0
			105			= 20
			86			= 1
			27			= 10 ,
	- -		6			=20 ,
	- - (" ")		5			= 10
( )	-		7			
			11.2			=10 , =20 ,
( )	-		27			=3 , = 10
			5			

	( )			32		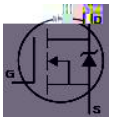
	( )			128		- .
				1.2		=10 , =0
			10			= 25 , = 10 , / =
			6			100 /

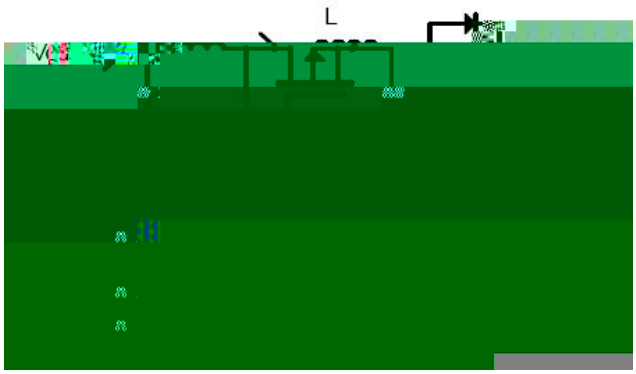
L

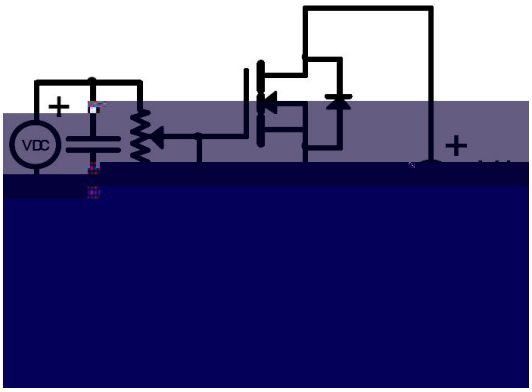
VDC
+
+

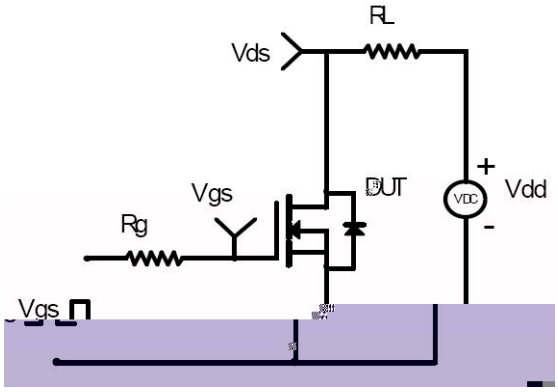
RL
Vds
Vgs
Rg
DUT
VDC
+
Vdd
-
Vgs

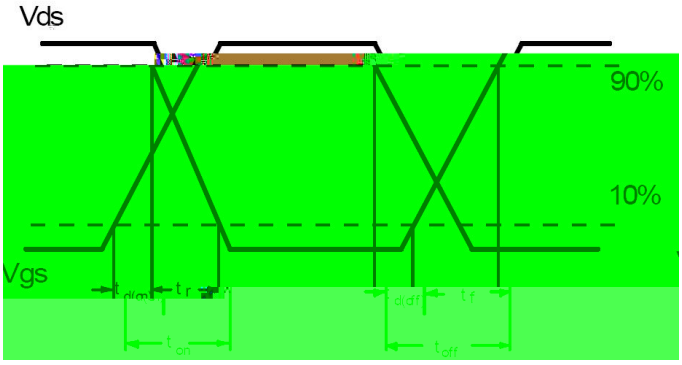
Vds
90%
10%
Vgs

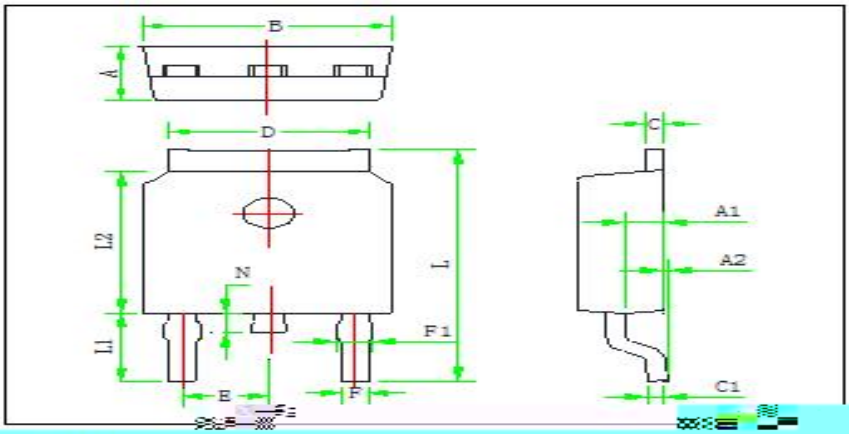

C1	0.40	0.50	0.58
D	5.12	5.62	5.52
E	2.286 TYP		
F	0.66	0.76	0.86
F1	0.66	0.86	1.06
L	9.60	9.90	10.20
L1	2.6	2.8	3.0
L2	5.95	6.10	6.25
N	0.60	0.80	1.00